# ROLLER'S Multi-Press Li-Ion

*ab Maschinen-nummer 137769*

| **Teileverzeichnis** | **Spare parts list** | **Liste des pièces** | **Elenco dei pezzi** |
|---|---|---|---|
| *Aktueller Stand siehe www.albert-roller.de* | *Latest version see www.albert-roller.de* | *Situation actuelle voir www.albert-roller.de* | *Ultimo aggiornamento vedi www.albert-roller.de* |

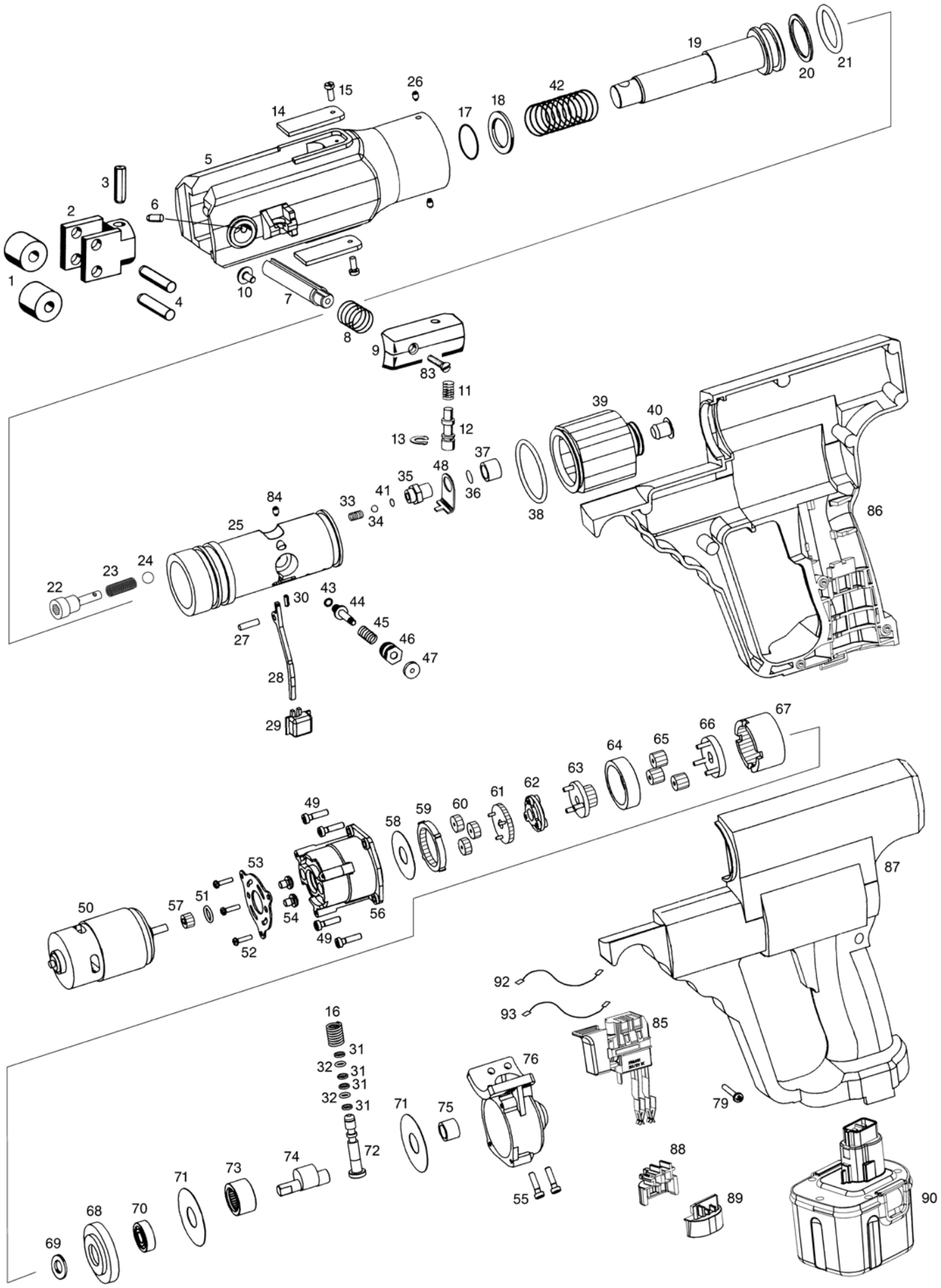

| | deu | eng | fra | ita | |
|---|---|---|---|---|---|
| — | Rollenträger mont.<br>Pos. 1, 2, 4 | Roller holder mont.<br>Pos. 1, 2, 4 | Support galets mont.<br>Pos. 1, 2, 4 | Portarulli mont.<br>Pos. 1, 2, 4 | 570226 |
| 3 | Spiralspannstift | Spiral pin | Goupille spiralée | Spina elastica | 088072 |
| 5 | Antriebsgehäuse | Housing | Carcasse | Carcassa | 571251A |
| 6 | Stift | Pin | Goupille | Perno | 570210 |
| — | Zangenhaltebolzen kompl.<br>Pos. 7 und 10 | Tongs shank compl.<br>Pos. 7 and 10 | Axe de serrage de la pince cpl.<br>Pos. 7 et 10 | Bullone della ganascia compl.<br>Pos. 7 e 10 | 570239 |
| 8 | Druckfeder | Pressure spring | Ressort de compression | Molla di compressione | 570213 |
| — | Druckleiste mont.<br>Pos. 9, 11, 12 und 13 | Pressure plate mont.<br>Pos. 9, 11, 12 and 13 | Barre de pression mont.<br>Pos. 9, 11, 12 et 13 | Barretta di pressione mont.<br>Pos. 9, 11, 12 e 13 | 570211 |
| 10 | Anschlagschraube | Stop screw | Vis d'arrêt | Vite di arresto | 570233R |
| 11 | Druckfeder | Pressure spring | Ressort de compression | Molla di compressione | 341010 |
| 12 | Verriegelungsstift | Thrust piece | Goupille d'ouverture | Spina di compressione | 570208R |
| 13 | Halbmondring | Crescent ring | Bague d'arret | Anello mezzaluna | 059035 |
| 14 | Schutz | Protector | Protection | Protezione | 570231R |
| 15 | Flachkopfschraube | Countersunk screw | Vis à tête platé | Vite a testa cilindrica | 570232 |
| 17 | O-Ring | Locking ring | Joint torique | Guarnizione O-Ring | 060009 |
| 18 | Scheibe | Washer | Rondelle | Ranella | 086053 |
| — | Vorschubkolben kompl.<br>Pos. 19, 20 + 21 | Feed piston compl.<br>Pos. 19, 20 + 21 | Piston d'avancement compl.<br>Pos. 19, 20 + 21 | Pistone di avanzamento compl.<br>Pos. 19, 20 + 21 | 571238 |
| 20 | Stützring | Back-up ring | Bague d'appui | Rondella d'appoggio | 060245 |
| 21 | O-Ring | Locking ring | Joint torique | Guarnizione O-Ring | 060244 |
| — | Hydraulikblock Standard kompl.<br>Pos. 20 – 25, 30, 33 – 37, 39, 43 – 48 und 84 | Hydraulic block Standard compl.<br>Pos. 20 – 25, 30, 33 – 37, 39, 43 – 48 and 84 | Bloc hydraul. Standard compl.<br>Pos. 20 – 25, 30, 33 – 37, 39, 43 – 48 et 84 | Blocco idraulico Standard compl.<br>Pos. 20 – 25, 30, 33 – 37, 39, 43 – 48 e 84 | 571240 |
| 27 | Zylinderstift | Straight pin | Tige cylindrique | Spina cilindrica | 088189 |
| 28 | Hebel | Lever | Levier | Leva | 571208R |
| 29 | Betätigungsknopf | Actuating button | Bouton d'actionnement | Pulsante d'azionamento | 571214R |
| 31 | Stützring | Back-up ring | Bague d'appui | Rondella d'appoggio | 060264 |
| 32 | O-Ring | Locking ring | Joint torique | Guarnizione O-Ring | 060258 |
| 38 | O-Ring | Locking ring | Joint torique | Guarnizione O-Ring | 060015 |
| 39 | Ausgleichsbehälter | Compensating reservoir | Reservoir de compensation | Contenitore di compensazione | 571212R |
| 40 | Stopfen mit Stabmagnet | Plug with magnet | Bouchon avec magnet | Tappo con calamita | 571249R |
| 42 | Druckfeder | Pressure spring | Ressort de compression | Molla di compressione | 571265R |
| 49 | Linsenschraube | Fillister head screw | Vis tête fraisée bombée | Vite a testa svasata con perno | 083137 |
| — | Motor kompl.<br>Pos. 50, 53, 54 und 57 | Motor compl.<br>Pos. 50, 53, 54 und 57 | Moteur compl.<br>Pos. 50, 53, 54 und 57 | Motore compl.<br>Pos. 50, 53, 54 und 57 | 575500R12 |
| 51 | O-Ring | Locking ring | Joint torique | Guarnizione O-Ring | 060253 |
| 52 | Linsenschraube | Fillister head screw | Vis tête fraisée bombée | Vite a testa svasata con perno | 083134 |
| 55 | Zylinderschraube | Fillister head screw | Vis à tête cylindrique | Vite a testa cilindrica | 081123 |
| — | Planetengetriebe<br>Pos. 49, 51, 52, 56, 58 – 67 | Planetary gear drive<br>Pos. 49, 51, 52, 56, 58 – 67 | Engranage planetaire<br>Pos. 49, 51, 52, 56, 58 – 67 | Ingranaggio planetario<br>Pos. 49, 51, 52, 56, 58 – 67 | 571235 |
| — | Pumpe kompl.<br>Pos. 16, 31, 32, 55, 68 – 76 | Pump compl.<br>Pos. 16, 31, 32, 55, 68 – 76 | Pompe compl.<br>Pos. 16, 31, 32, 55, 68 – 76 | Pompa compl.<br>Pos. 16, 31, 32, 55, 68 – 76 | 571220 |
| 79 | Blechschraube | Sheet metal screw | Vis à tôle | Vite da lamiera | 083064 |
| 83 | Senkschraube | Countersunk screw | Vis à tête fraisée | Vite a testa svasata | 083176 |
| 85 | Schalter | Switch | Interrupteur | Interruttore | 575527R14 |
| — | Gehäuseschalen<br>Pos. 86 und 87 | Housing shells<br>Pos. 86 and 87 | Coquille carcasse<br>Pos. 86 et 87 | Calotta carcassa<br>Pos. 86 e 87 | 571515R |
| — | Kontakthalter<br>Pos. 88 und 89 | Contact holder<br>Pos. 88 and 89 | Support de contact<br>Pos. 88 et 89 | Supporto di contatto<br>Pos. 88 e 89 | 571521R |
| 90 | ROLLER'S Akku 14,4 V, 3,2 Ah Li-Ion | ROLLER'S Akku 14,4 V, 3.2 Ah Li-Ion | ROLLER'S Akku 14,4 V, 3,2 Ah Li-Ion | ROLLER'S Akku 14,4 V, 3,2 Ah Li-Ion | 571555A14 |
| 91 | Lichtleiter | Light conductor | Conducteur de lumière | Conduttore di luce | 039085 260 |
| 92 | Leitung schwarz | Cable black | Cable noir | Cavo nero | 571506R |
| 93 | Leitung rot | Cable red | Cable rouge | Cavo rosso | 571507R |